R19IH3S-PPM1 19" P-CAP Panel PC (Intel® 5th Generation Core™ i5 Platform)

Mechanical Design

Real Flat Panel Mount (IP65 front side)

Fully Integrated I/O

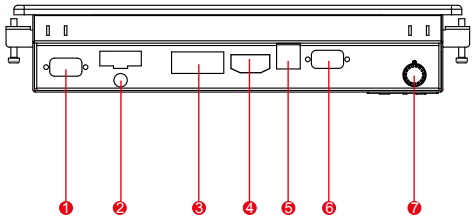

1. RS232
2. 12V DC IN
3. LAN x 2
4. HDMI
5. USB3.0 x 2
6. RS232(Optional 422/485)
7. Brightness Adjustment Knob

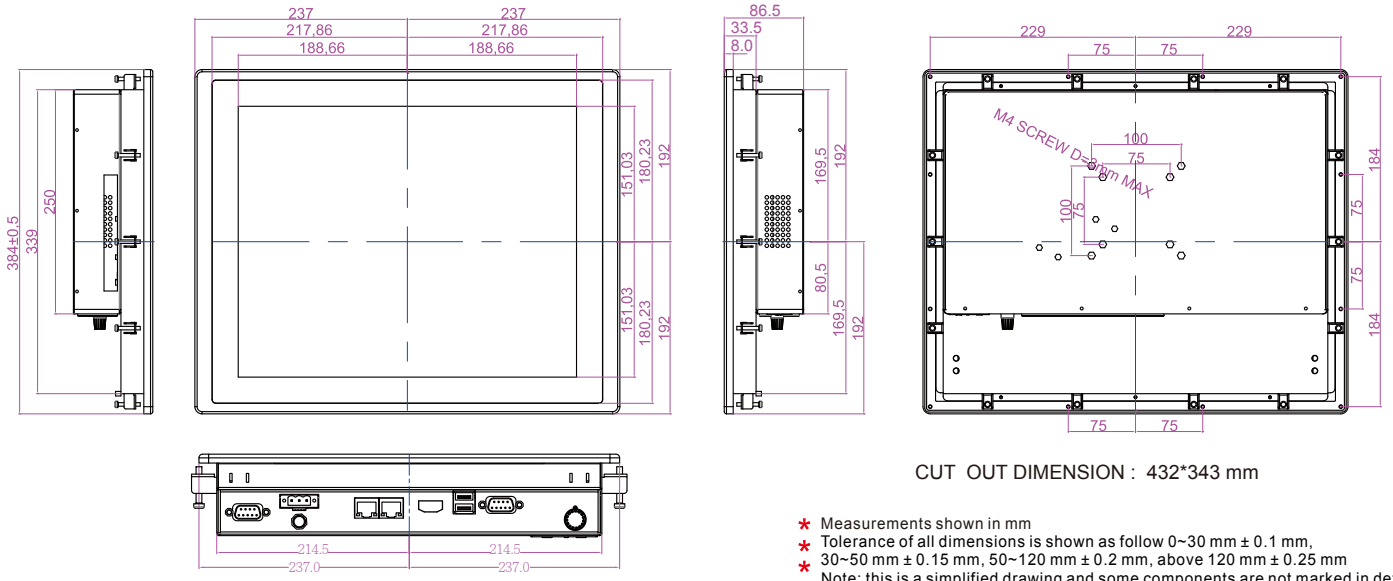

CUT OUT DIMENSION : 432*343 mm

* Measurements shown in mm
* Tolerance of all dimensions is shown as follow 0~30 mm ± 0.1 mm, 30~50 mm ± 0.15 mm, 50~120 mm ± 0.2 mm, above 120 mm ± 0.25 mm
* Note: this is a simplified drawing and some components are not marked in detail. Please contact our sales representative if you need further product information.

Specifications

System :

- Processor : Intel Core i5-5200U Broadwell 2.2GHz (turbo to 2.7GHz)
- System Chipset : Intel® QM87 Chipset
- System Memory : 1 x DDR3L 1333/1600 SO-DIMM (Default 4GB Max 16GB)
- Storage : 64GB mSATA SSD
- LAN : Intel® Ethernet Controller I211-AT + Intel® Gigabit Ethernet PHY I218-LM
- Audio : Realtek ALC886 HD Audio Codec

Input / Output :

- Serial Ports : 1 x RS232(Optional 422/485)
  1 x RS232
- USB Ports : 2 x USB 3.0
- Ethernet : 2 x RJ 45-10/100/1000 Mbps
- HDMI : 1 x HDMI

Power Specifications :

- Power Input : 12V DC IN
- Power Consumption : 80W (Max backlight & High CPU load)

Accessories

- External Adapter : 110~230V Ac-in Power Adapter

Panel Spec

- Size/Type : 19"TFT
- Resolutions : 1280 x 1024
- Brightness : 250 cd/m² (typ.)
- Contrast Ratio : 1000 : 1(typ.)
- Viewing Angle : -85~85(H);-80~80(V)
- Max. Colors : 16.7M (8 bits/colors)
- Touch Screen : Projective Capacitive multi-touch

Mechanical Specification :

- Cooling System : Fanless Design
- Mounting : VESA Mount (75x75mm,100x100mm)
- Dimension (W x H x D) : 474 x 384 x 86.5 (mm)
- Cut out Dimension : 432 x 343 (mm)

Environment Considerations :

- Operating Temperature : 0°C to 50°C
- Operating Humidity : 30% to 90% (non condensing)

OS Support

- Window Embedded Std. 7
- Window 7 PRO for Embedded System
- Window Embedded 8.1 Industry Pro
- Windows 10 IoT Enterprise